QoS in 5G

Agenda

- QoS: What, Why
- QoS Flows: Definition
- QoS Flow: Properties and Setup
  - In UE, RAN, 5GC
- QoS Enforcement and overall picture

QoS – What

Quality of Service:

Capability of a network to offer a 'service' with a certain 'quality'

Cellular networks:

- Multiple users, accessing different services
- via Common fixed set of resources

QoS: How to achieve this efficiently

QoS - Why

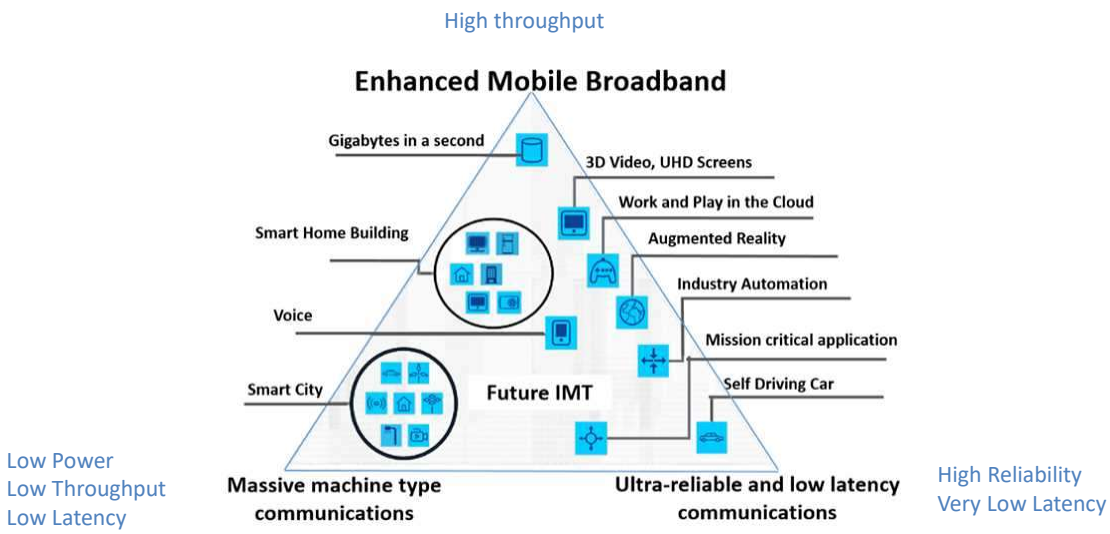

QoS – Why

- Device: Application

User experience
Bandwidth
Latency
Packet error rates
Jitter
Consistency
Reliability

- Network:

Resource management
Radio, network and transport resources

User differentiation
Managing subscription levels, differentiating services (prioritizing voice over browsing) and user groups

QoS in 5G: QoS Flows

Pre-requisites:
Connectivity and Interfaces

Connectivity and interfaces

- PDU session: logical connectivity to a specific DNN
  - Control Plane for signaling: via NAS (setup session params, modify, release)
  - User Plane for user data going from app on UE <-> server in DNN

- Bearers:
  - Radio (UE<->gNB):
    - CP: SRBs to carry NAS signaling
    - UP: DRBs to carry user IP data
  - Network (gNB<->5GC):
    - CP: NGAP to carry NAS signaling to AMF (forwarded to SMF via SBI HTTP APIs)
    - UP: GTP-U to tunnel data to UPF

PDU Session, Radio and Network Bearers

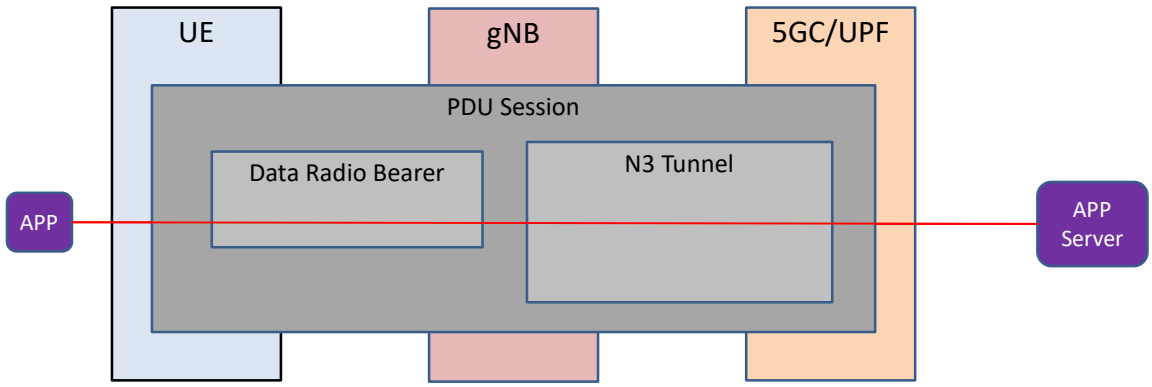

QoS Flow

- QoS in 5G => Flow based
- 'QoS flow' -> finest granularity of differentiation (within a PDU session)
- Identified by a QFI (QoS Flow Identifier)
  - All flows with same QFI -> same treatment

Made of one or more Service Data Flows (SDFs)

- End to end packet flow(s)
- Identified by a set of Packet Filters
- Defined set of characteristics and/or requirements
- SDFs with same requirements -> mapped to same QFI

Assigned specific radio and network Resources

QoS Flows in 5G Networks

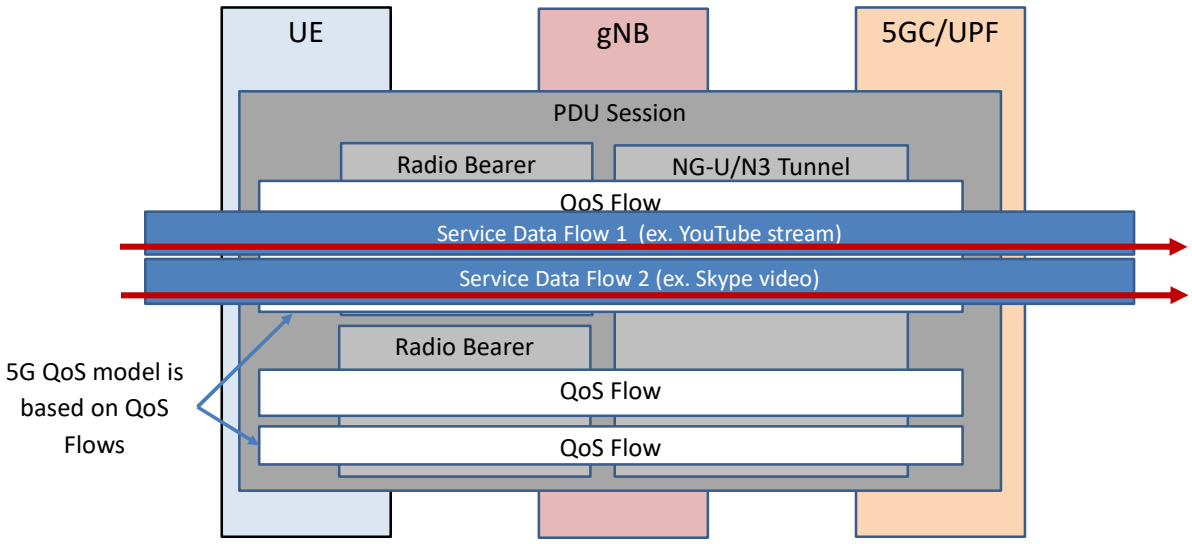

Stages

- Step 1: Define QoS Flow
  - QoS Flow properties and requirements
  - Conveyed by Requester (UE or Network)
- Step 2: Setup: Convey flow information
  - SMF Central point
  - Verify and decide Flow parameters to be adopted
  - Send info to UE (via N1), (R)AN (via N2) and UPF (via N4)
- Step 3: Enforcement: Allocate resources, install rules
  - Endpoints are at UE and UPF – these classify and mark packets based on rules
  - (R)AN and transport network – these carry the data, allocate resources and apply treatment according to requirements

QoS Info in the network

SMF – Central point.

- **QoS Profile to RAN:** Provided by the SMF to the AN or preconfigured in the AN
- **QoS rule(s) to UE :** Provided by the SMF to the UE and/or Derived by the UE by applying Reflective QoS control
- **PDRs etc to UPF:** One or more UL and DL PDRs provided by the SMF to the UPF.

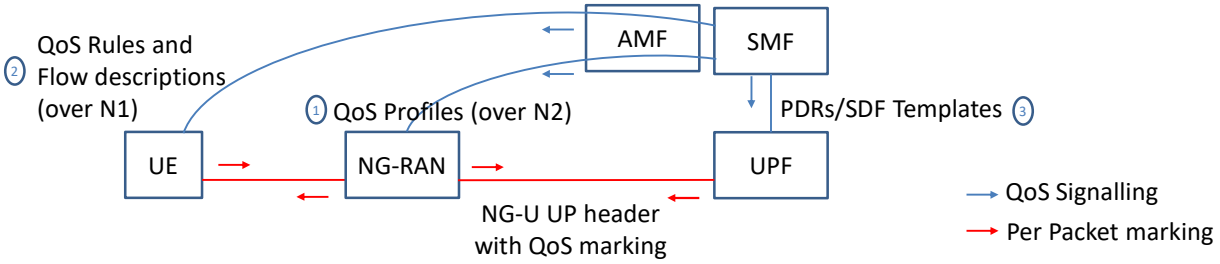

QoS Procedures

Default flow setup

- All data in 5G has to belong to a QoS flow
  - A Default flow is setup by the network during PDU Session Establishment
  - Additional QoS flows can be setup on demand (UE or network initiated)
  - Data that does not match any QoS flow is dropped

- Default flow

During PDU session Establishment, SMF gets

  - UE session management subscription data from UDM (default 5QI, ARP, SessionAMBR)
  - pccRules from PCF with the SDF and corresponding rules for the default flow

SMF creates a default flow using this information and signals to UE, RAN, UPF

Default QoS Flow

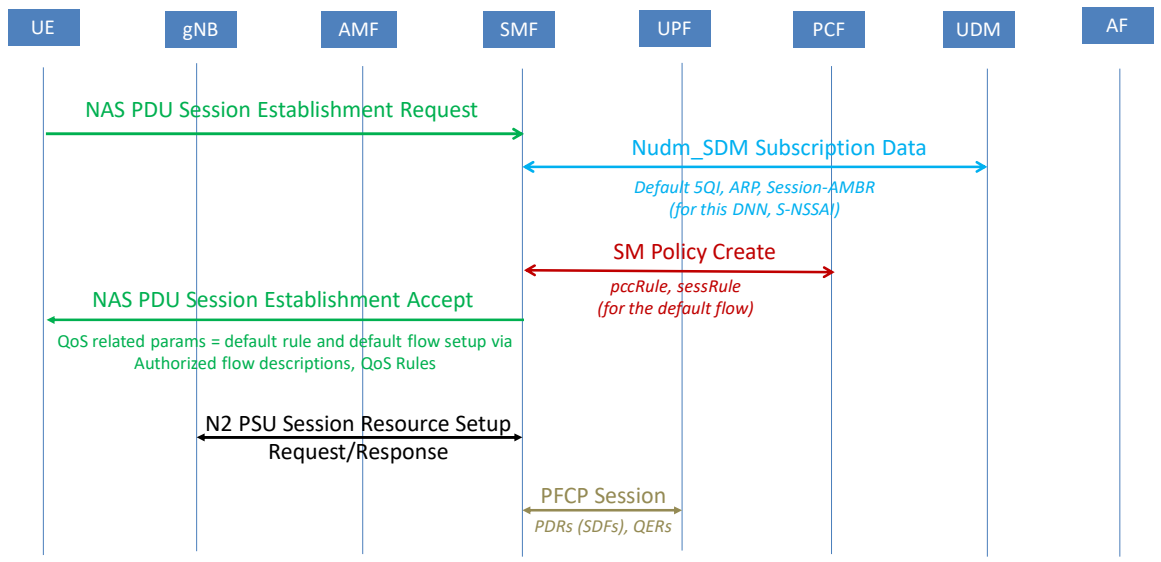

Additional QoS flows - setup triggers

- UE initiated
  - Application on UE requests for a specific QoS treatment
  - Network will validate this against subscription (typically static), policy (more dynamic), current resource availabilities (dynamic)
  - Network can accept/deny accordingly
- Network initiated
  - Network decides when QoS is needed, as well as all QoS properties and pushes to the UE application
  - E.g. IMS: based on IMS application level signalling, on a per call basis, IMS network (AF) will push QoS to PCF which will inturn trigger QoS to be setup by SMF
  - Typically initiated by PCF
  - Based on dynamic changes, UDM, SMF, AMF, (R)AN can initiate modifications too

QoS flow setup - Procedures

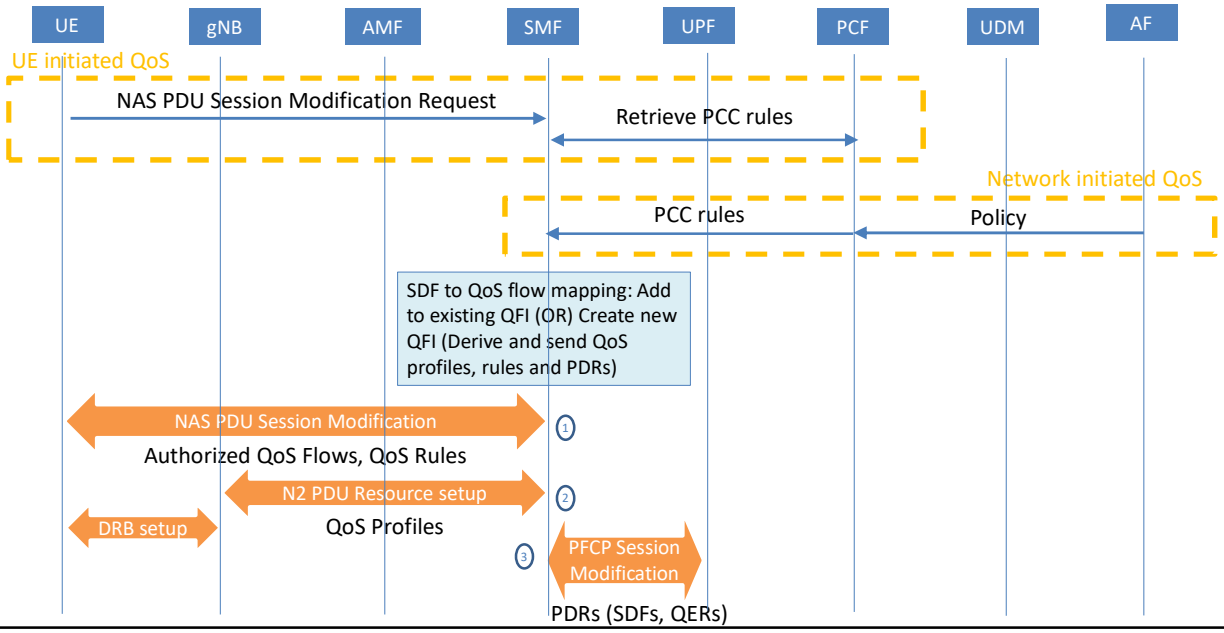

QoS Flow Properties and Setup

① QoS Profile (to RAN)

- **Describes the QoS flow characteristics, requirements, expected treatments**
- Sent to (R)AN
  - Along with QFI
  - During PDU session establishment (for default flow) or PDU session modification (all other flows)
  - Additionally, every time user plane is activated
  - Corresponding 'Authorized flow descriptions' sent to UE in N1 NAS signalling
- Two types of flows
  - GBR flows
  - NonGBR flows
- Properties
  - 5QI
  - ARP
  - RQoS
  - Bit-rates
  - Error rates

QoS Profile - 5QI

(5G QoS Indicator) QoS Parameter

- A reference to 5G QoS characteristics (~ QCI of 4G)
- Standard, pre-configured or dynamic
  - Standard: spec defines all flow requirements and treatment rules
  - Dynamic: Complete QoS characteristics need to be signalled explicitly
  - Pre-configured: configured locally (typically used in fixed ANs)
- Describes the packet forwarding treatment edge-to-edge, between UE and UPF (e.g. delays, packet error rates, scheduling weights, admission thresholds etc.)
- 5QI can be used as QFI
  - If standardized 5QIs or pre-configured 5QIs are used and 5QI is within the range of the QFI (i.e. < 64)
- Default 5QI value shall be from the standard Non-GBR 5QIs

QoS Characteristics of Standard 5G QoS Identifier

Sample Values

5QI Value	Resource Type	Default Priority Level	Packet Delay Budget	Packet Error Rate	Default Maximum Data Burst Volume	Default Averaging Window	Example Services
1	GBR	20	100 ms	10^{-2}	N/A	2000 ms	Conversational Voice
2		40	150 ms	10^{-3}	N/A	2000 ms	Conversational Video (Live Streaming)
3		30	50 ms	10^{-3}	N/A	2000 ms	Real Time Gaming, V2X messages Process automation - monitoring
65		7	75 ms	10^{-2}	N/A	2000 ms	Mission Critical user plane Push To Talk voice (e.g., MCPTT)
6	Non-GBR	60	300 ms	10^{-6}	N/A	N/A	Video (Buffered Streaming) TCP-based (e.g., www, e-mail, ftp etc.)
7		70	100 ms	10^{-3}	N/A	N/A	Voice, Video (Live Streaming) Interactive Gaming
79		65	50 ms	10^{-2}	N/A	N/A	V2X messages
85	Delay Critical GBR	21	5 ms	10^{-5}	255 bytes	2000 ms	Electricity Distribution- high voltage
84		24	30 ms	10^{-5}	1354 bytes	2000 ms	Intelligent transport systems

QoS Profile - ARP

ARP (Allocation and Retention Priority)

- Admission control: Reject current request or accept it by pre-empting an existing (lower priority) flow
- Based on the following characteristics
  - Priority level to decide relative importance of QoS flows (admission control)
  - Pre-emption capability: Whether a flow can get from another of lower priority
  - Pre-emption vulnerability: Whether a flow may lose for another of higher priority

QoS Profile – NonGBR params

NonGBR flow parameters

- RQA: Reflective QoS
  - Look at DL flow, locally create QoS rules for UL flow on same lines
- Session-AMBR:
  - Aggregate bit rate across all NonGBR flows (for an averaging window)
  - Enforced per UPF
- UE-AMBR:
  - Aggregate bit rate over all sessions (for an averaging window)
  - Enforced per (R)AN

QoS Profile – GBR flow params

GBR Flow parameters

- GFBR: Guaranteed Flow Bit Rate
- MFBR: Maximum Flow Bit Rate
- Notification Control:
  - Indicate when QoS requirements cannot be met
  - Apply Alternate QoS profiles where applicable
  - Useful for cases where applications can do rate adaptation
  - Notification chain UE<-(R)AN, (R)AN->SMF->PCF->AF
- Max packet loss rate (UL and DL) that be tolerated by the application

Enforcement at Access Stratum

Downlink:

- Data radio bearer (DRB) defines the packet treatment on the radio interface
  - Same packet forwarding treatment for all packets in a DRB
  - Separate DRBs may be established for QoS flows requiring different packet forwarding treatment, or several QoS Flows (GBR and non-GBR too) belonging to the same PDU session can be multiplexed in the same DRB.
- Downlink Rate control for GBR
  - GFBR to MFBR – May be based on relative Priority in 5QI
  - More than MFBR - traffic may get discarded or delayed by a rate shaping or policing function at the UE, RAN, UPF

Uplink:

- UL Rate control
  - Using Uplink Scheduling, Logical Channel priority Prioritised bit rate and Buffer size duration

QoS Rules

Rules => how to map 'data traffic' to a 'QoS flow'

- Can be: Explicitly signaled, Pre-configured, Derived (reflective QoS)
- A default QoS rule sent to UE for every PDU Session
  - During Session Establishment
- Additional QoS rules (for additional flows) can be sent NAS message over N1
  - During PDU Session Establishment/Modification
  - Each user plane setup
  - Multiple QoS rules for the Session
  - Can be more than 1 rule per flow
- Only the default QoS rule (with no packet filter) exist for a PDU Session of Type Unstructured

QoS Rule contents

- Rule Id
- Operation code (Create, Delete or Modify rule)
- Default QoS Rule bit
- PF (Packet Filters)
  - Direction, Length, Id, Contents →

IPv4 remote address type
IPv4 local address type
IPv6 remote address/prefix length type
IPv6 local address/prefix length type
Protocol identifier/Next header type
Single local port type
Local port range type
Single remote port type
Remote port range type
Security parameter index type
Type of service/Traffic class type
Flow label type
Destination MAC address type
Source MAC address type
802.1Q C-TAG VID type
802.1Q S-TAG VID type
802.1Q C-TAG PCP/DEI type
802.1Q S-TAG PCP/DEI type
Ethertype type

- Precedence
- Segregation
- QFI

Authorized QoS Flow Descriptions

- QoS flow descriptions pair with QoS rules
- Describes the flow requirements for the SDF outlined in QoS rule
- Requested by UE in the UE->5GC direction, Authorized by network in the 5GC->UE direction
- QoS Flow Descriptions
  - QFI
  - Operation type (Create, Modify, Delete)
  - Parameters:
  - 5QI
  - GFBR (UL and DL)
  - MFBR (UL and DL)
  - Averaging Window
  - EPS bearer Id

③ PDRs

QoS Control at UPF

- At the session level (Session-AMBR or UL and DL Packet Rate of a PDU session)
- At the QoS Flow level
- At the service data flow (SDF) or application level

Via Packet Detection Rules

- Information to the UPF to enable
  - Packet classification
  - Bandwidth enforcement
  - Marking packets

QERs

- Service detection and QFI marking (SDF mapping)
- QoS Control (MBR, GBR or Packet Rate enforcement)
- DL flow level (DSCP) marking for application detection
- Gating Control
- 5GC reflective QoS indication for uplink traffic.

QoS Enforcement

UL

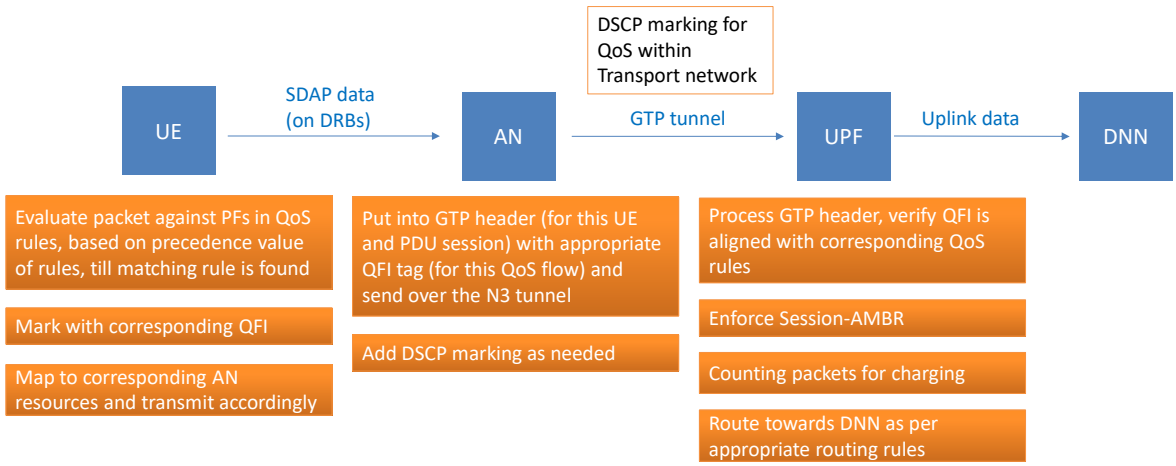
DSCP marking for QoS within Transport network
UE
SDAP data (on DRBs)
AN
GTP tunnel
UPF
Uplink data
DNN
Evaluate packet against PFs in QoS rules, based on precedence value of rules, till matching rule is found
Mark with corresponding QFI
Map to corresponding AN resources and transmit accordingly
Put into GTP header (for this UE and PDU session) with appropriate QFI tag (for this QoS flow) and send over the N3 tunnel
Add DSCP marking as needed
Process GTP header, verify QFI is aligned with corresponding QoS rules
Enforce Session-AMBR
Counting packets for charging
Route towards DNN as per appropriate routing rules

DL

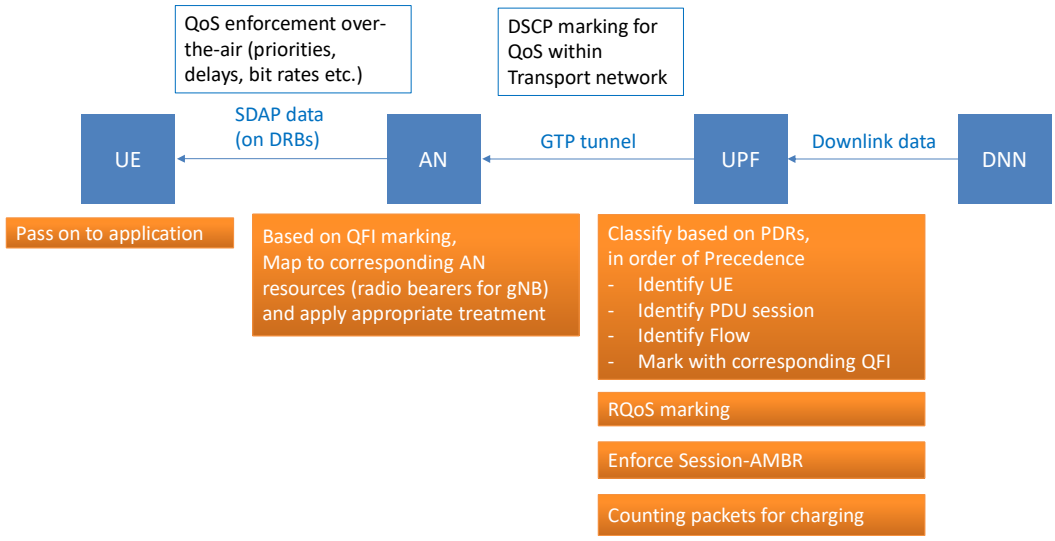
QoS enforcement over-the-air (priorities, delays, bit rates etc.)
DSCP marking for QoS within Transport network
UE
SDAP data (on DRBs)
AN
GTP tunnel
UPF
Downlink data
DNN
Pass on to application
Based on QFI marking, Map to corresponding AN resources (radio bearers for gNB) and apply appropriate treatment
Classify based on PDRs, in order of Precedence
- Identify UE
- Identify PDU session
- Identify Flow
- Mark with corresponding QFI
RQoS marking
Enforce Session-AMBR
Counting packets for charging

DL QoS Flow example

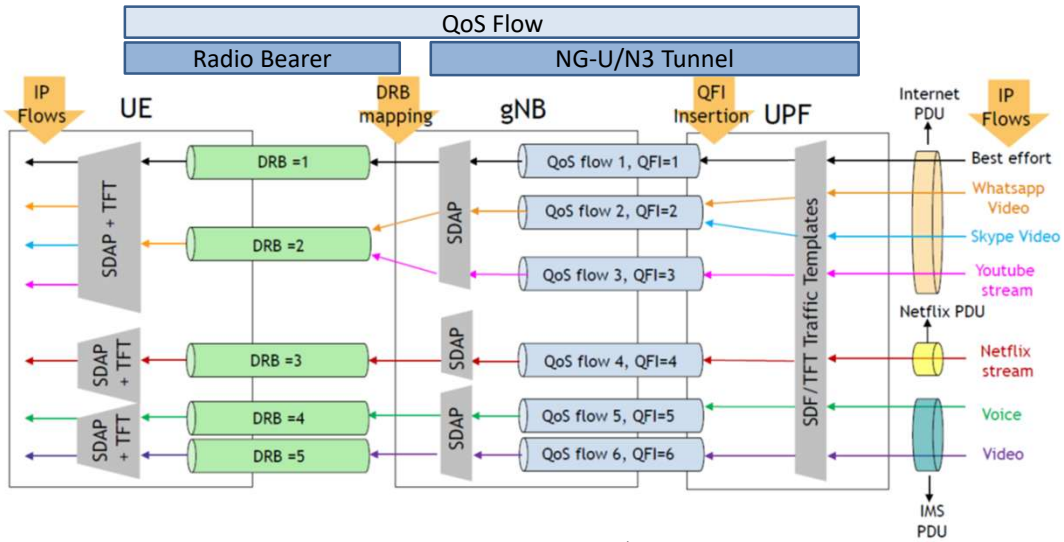

Source: QoS/QoE Developments in 4G-IoT & 5G Technologies by Fernando Rodini, Qualcomm

End to end stacks, key functions and interfaces

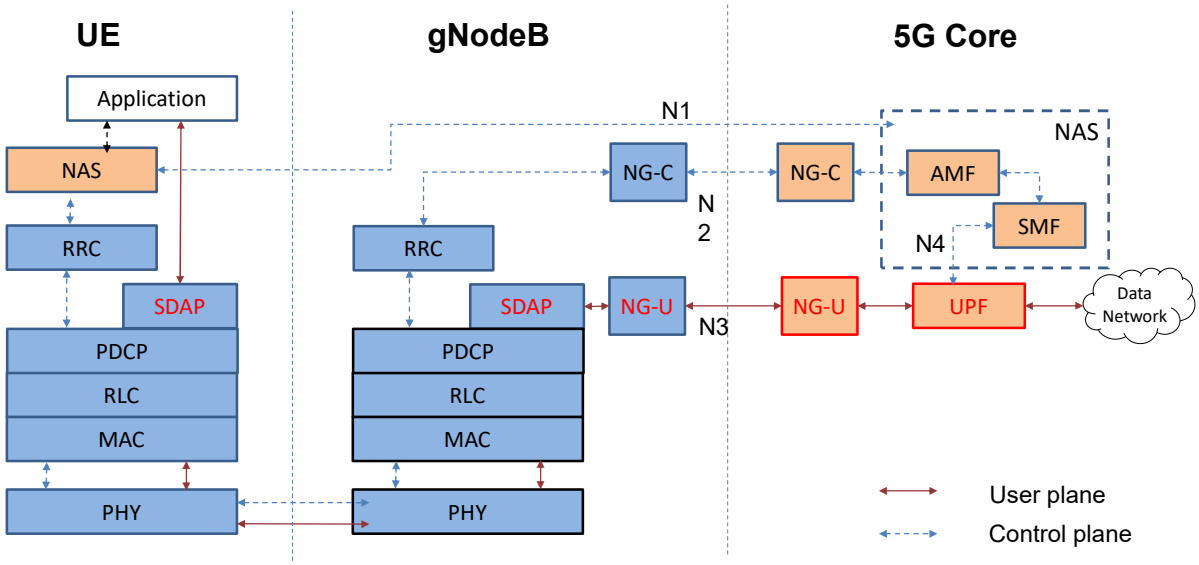

QoS properties

5QI elements

Resource Type	Dedicated network resources related are permanently allocated or not 1) GBR – GRB resource or Delay critical GBR resource 2) Non-GBR On demand with dynamic policy (GBR) or preauthorized with Static policy (Non-GBR)
Priority level	Priority in scheduling resources among QoS Flows: within same UE and between UEs
Packet Delay Budget (PDB)	Upper bound for the delay time between UE and Terminating UPF • Same for UL and DL • used to support the configuration of scheduling and link layer functions (e.g. the setting of scheduling priority weights and HARQ target operating points). a. Delay Critical GBR: Delay > PDB counted as lost if < MDBV and < GFBR b. GBR: maximum delay with a confidence level of 98 % c. Non-GBR: In uncongested scenarios, 98% within PDB Packets delayed > PDB are still delivered (Delay Critical **can be** discarded)
Packet Error Rate (PER)	Upper bound for the rate of PDUs that have been processed by say RLC of sender but not successfully delivered to receiver PDCP • An upper bound for a rate of non-congestion related packet losses • For appropriate link layer protocol configurations (e.g. RLC and HARQ in RAN of a 3GPP access). • Delay critical GBR packets > PDB considered in PER
Averaging window	Averaging window for GFBR and MFBR
Maximum Data Burst Volume	Largest amount of data that the 5G-AN is required to serve within a period of 5G-AN PDB. Only for Delay Critical GBR.

QoS enforcement

QoS handling in 5G

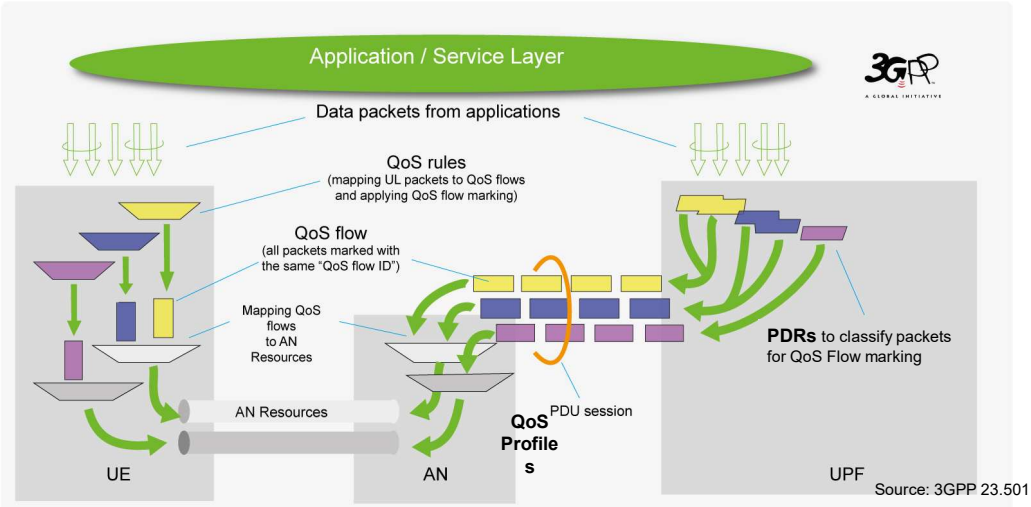

- NAS level packet filters in the UE and in the 5GC associate UL and DL packets with QoS Flows
- AS-level mapping rules in the UE and in the NG-RAN associate UL and DL QoS Flows with DRBs
- Network is in control of the QoS (UE and Core are aware of the services)

AMBR/MFBR enforcement and rate limitation

- Session-AMBR
  - UL and DL enforced by UPF
  - For session with multiple anchors, UL enforced by ULCL UPF, DL enforced by each PDU session anchor independently
  - UE performs rate limitation
- UE-AMBR
  - NonGBR flows: (R)AN enforced
- MFBR
  - GBR flows: enforced at RAN for UL and DL, and per SDF by UPF in DL
  - For Non3GPP, enforced by UE in the UL for GBR flows

Transport Network in 5G

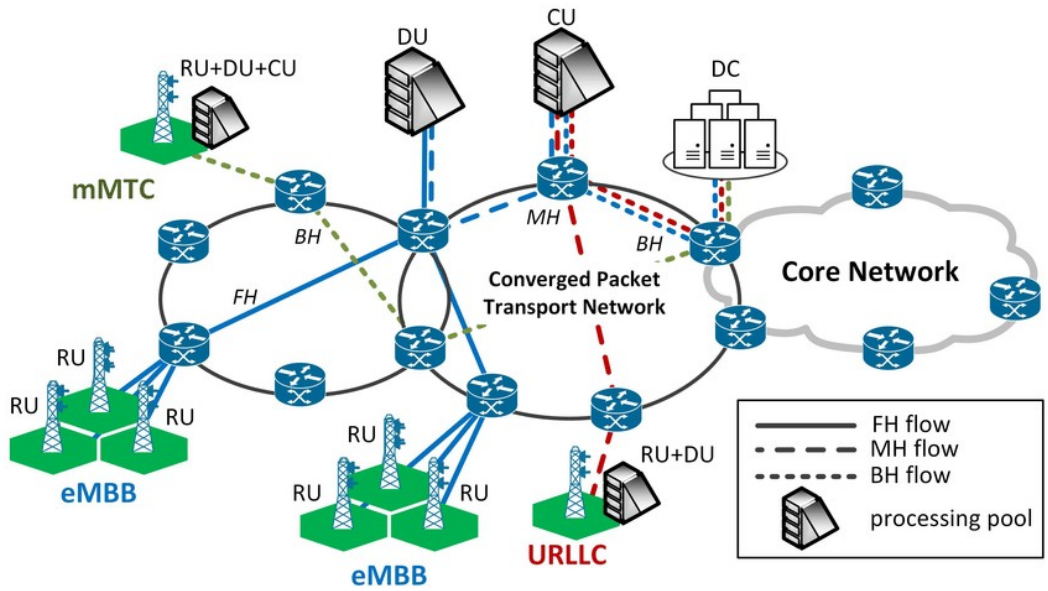

Source:https://www.mdpi.com/2076-3417/10/21/7429/htm

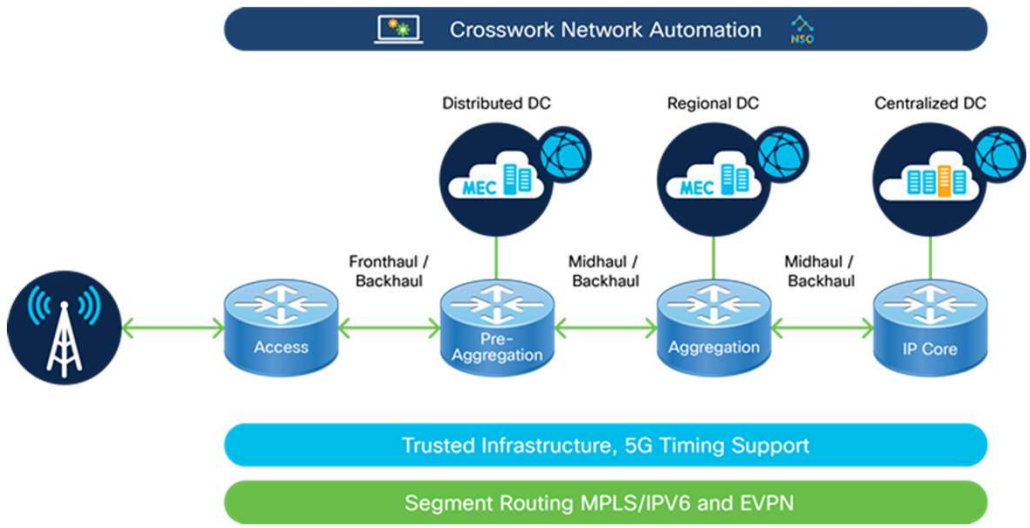

Source:www.cisco.com

5G Macro Base station - RAN Split

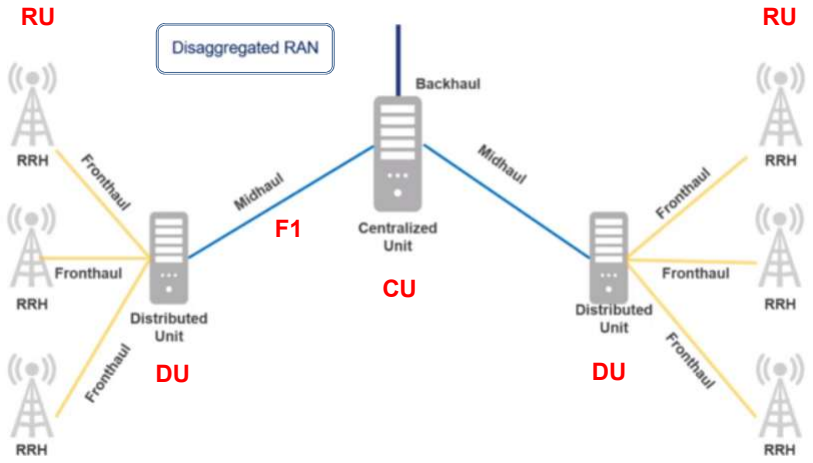

Source: Radisys

5G C-RAN Overview

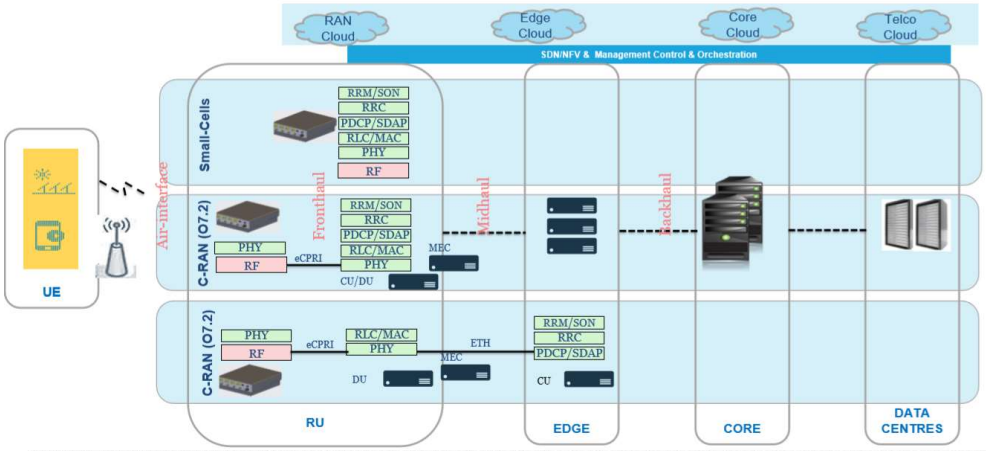

- ✓ Cloud-RAN based architecture shall meet 5G requirements of ultra-low latency and massive data throughput
- ✓ Multiple RAN Deployment options based on service requirements
  - ex: for low-latency scenarios, CU/DU can be collapsed into single node and MEC could be part of the topology
  - For eMBB case, CU and DU could be distributed across and it may be possible to have MEC entities distributed across the cloud
- ✓ Mix of small-cells, C-RAN (Option 7.2) based deployment based on 5G
- ✓ eCPRI is used for fronthaul and multiple options exist for fronthaul (OTN/PON, Ethernet)

Source: Aricent

5G Front Haul

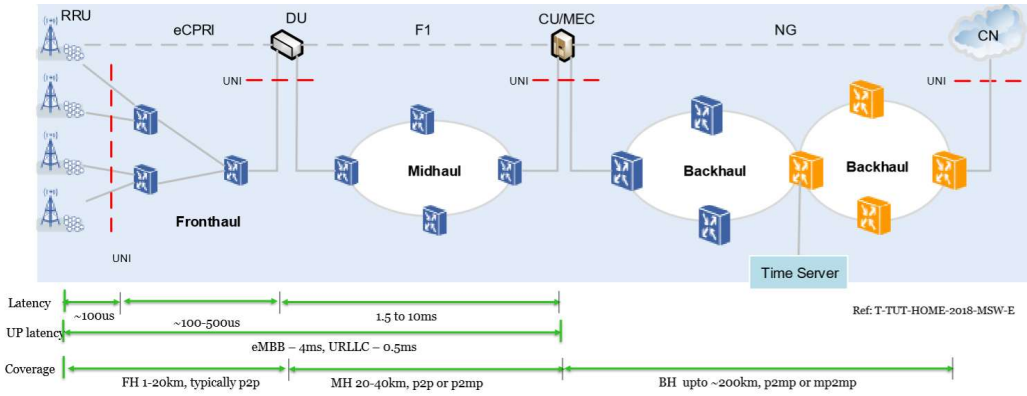

- ✓ Fronthaul – network between RU and DU
- ✓ Midhaul - network between DU and CU (F interface)
- ✓ Backhaul - network between CU and 5G NGC (and EPC)
- ✓ In case CU and DU are co-located then there shall be no midhaul. For small-cell case, there shall be backhaul only (as RU, DU and CU are collapsed into single node)

Source: Aricent

Approximate Fronthaul Requirements

Number of Antenna Ports	Radio Channel Bandwidth			
	10 MHz	20 MHz	200 MHz	1GHz
2	1 Gbps	2 Gbps	20 Gbps	100 Gbps
8	4 Gbps	8 Gbps	80 Gbps	400 Gbps
64	32 Gbps	64 Gbps	640 Gbps	3,200 Gbps
256	128 Gbps	256 Gbps	2,560 Gbps	12,800 Gbps

$$B_{CPRI} = A \cdot f_s \cdot b_s \cdot 2 \cdot (16/15)$$

A - # of antennas, f_s – sampling rate, b_s = number of bits per sample

Source: ITU

Thank You